Automated Systems & Technologies
14-15 June 2017 • St. Petersburg, Russia

DEVELOPMENT OF A TRACKING SYSTEM FOR MANIPULATION ROBOTIC ARM

Merkulov Daniil, Potekhin Vyacheslav, Gartsev Alexandr

Graduate School of Cyber-Physical and Control
Peter the Great St. Petersburg Polytechnic University
Grazhdansky Pr., 28
195220, St. Petersburg, Russia
ch4mpl8@gmail.com

Abstract

This paper analyzes the problem of implementation bionic robotic system. An image processing definition and its features are explained. The algorithm of video tracking is chosen and described. The example of tracking system is given. Also implementation part which includes software and programming are described.
Keywords: Bionic, bionic system, robotic, robotic arm, tracking, tracking system, video tracking, image processing.

INTRODUCTION

Bionic systems present systems which use features, functions, structures and principles of nature. It could be a form of natural thing and its industrial prototype. Bionic – it is a connection between biology and technique. Bionic has deep relations with biology, physic, chemistry, cybernetic and engineering sciences like electronic, navigation, communication and etc.

The main idea of bionic is a finding of mechanisms of animals' behavior and its realization. Also bionic wants to understand these processes. The problem of creation of bionic system is contained in unexplored area of hidden opportunities of animals. Now days researching of humans and animals' analyze systems is a big part of scientific and technical progress. Also realization of these systems is a very complicated task, because it should be

small system with a lot of sensors and mechanisms for navigation and recognizing in environment [1].

In modern world exists huge amount of factories and productions where workers could be hurt. It could be done by a mistake of human or by a machine. To prevent this accident a special system (which let us to control production from safe place) should be implemented. The idea of this system is «to delete» a human from directly area of production and «to put» him into a box with a controller [2].

The solution of this purpose could be reached by using of bionic robotic hand system. This system consists of a bionic robotic hand and of a controller to manipulate this arm. It lets us to control production process from another place and safe our life. The problem of this system is how to make it closer to humans' movements and how to make the control process easier. To solve these problems should be used a machine vision system. It could provide communication between human and robotic hand without any controllers [3].

The machine vision is an application of computer vision for production while the computer vision is a common pack of methods and algorithms which let the computers to see. The machine vision could be applied in the bionic system to provide more opportunities and possibilities for manipulation with environment. [4].

IMAGE PROCESSING

Image processing is processing of images using mathematical operations by using any form of signal processing for which the input is an image, a series of images, or a video, such as a photo or video frame; the output of image processing may be an image or a set of characteristics or parameters related to the image.

Video tracking

Video tracking is the process of locating a moving object (or multiple objects) over time using a camera. Video tracking can be a time consuming process due to the amount of data that is contained in video. Adding further to the complexity is the possible need to use object recognition techniques for tracking, a challenging problem in its own right.

To perform video tracking an algorithm analyzes sequential video frames and outputs the movement of targets between the frames. Basically, the computational complexity of these algorithms is low. Kernel-based tracking also known as mean-shift tracking is a common algorithm for tracking. It is an

iterative localization procedure based on the maximization of a similarity measure [5].

The principle of mean shift tracking is based on searching maximum of probability density function which describes parameters of image. To estimate probability density function we need to use kernel defined as $K(x_i\text{-}x)$. The kernel defines the weight of different points for estimating mean. Usually, the Gaussian kernel is used.

$$K(x_i - x) = e^{-c\cdot\|x_i - x\|^2} \tag{1}$$

The mean is calculated by the following equation:

$$m(x) = \frac{\sum_{x_i \in N(x)} K(x_i - x)\cdot x_i}{\sum_{x_i \in N(x)} K(x_i - x)} \tag{2}$$

where $N(x)$ – an area of x, set of points for which $K(x)\neq 0$.

The algorithm does estimation for points $x \leftarrow m(x)$, until $m(x)$ is changed.

A ROBOTIC ARM

Humans are good at moving around in the real world, if human needs robot to operate like humankind, the robot needs to be taught how to perform actions like a human.

The physical structure of the robot can be considered as consisting of the arm and the hand. The robot workspace is all places that the end part can reach. The workspace depends on the angle limitations of robot degree of freedom, the arm link lengths, the angle between the link, etc. Some workspaces are spherical and some workspaces have very complicated shapes. While choosing a suitable robot arm to an industrial purpose, it is important that the workspace is large enough to cover all positions need to be reached by the robot arm [6]. Figure 1 represents the workspace of the robot.

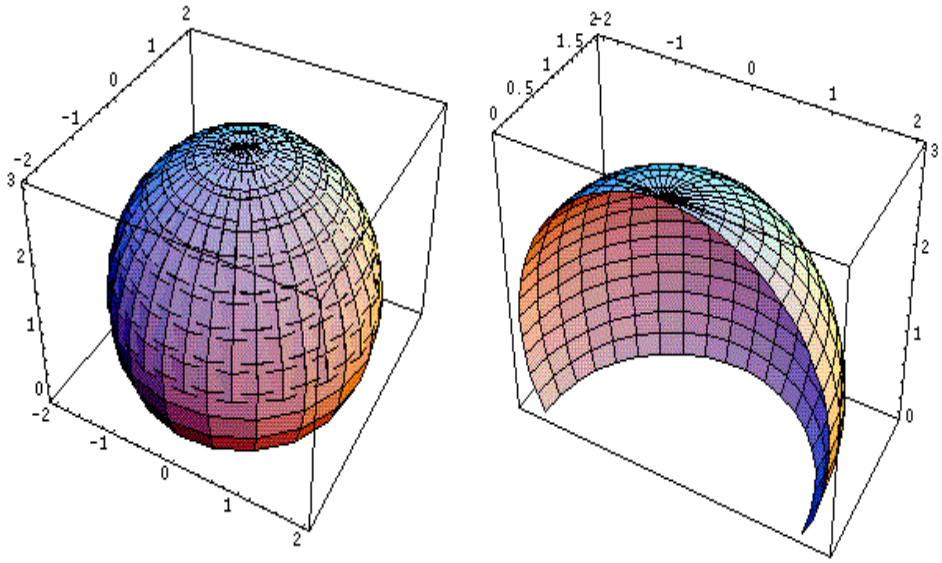

Figure 1. The Workspace of robot

The robot's workspace is the complete surface area of the sphere except the bottom which is the base of the robot, which the arm of the robot can not reach. Different sizes of workspace may generated by changing the length of link, but this would be the general shape. If there is any obstacle within the workspace of the arm movement, the shape can be more complicated.

IMPLEMENTATION

To implement this tracking system we have to use special software and hardware. For software part we need to choose programming language and image libraries. For hardware we need to choose robotic arm system and cameras for filming.

Software

OpenCV (Open Source Computer Vision Library) is an open source computer vision and machine learning software library. OpenCV was built to provide a common infrastructure for computer vision applications and to accelerate the use of machine perception in the commercial products.

The library has more than 2500 optimized algorithms, which includes a comprehensive set of both classic and state-of-the-art computer vision and machine learning algorithms. These algorithms can be used to detect and recognize faces, identify objects, classify human actions in videos, track camera movements and etc. [7]

We represent user’s wrist with five fingers as binary code with five bits

which we can use for encoding thirty two gestures as shown on the figure 2.

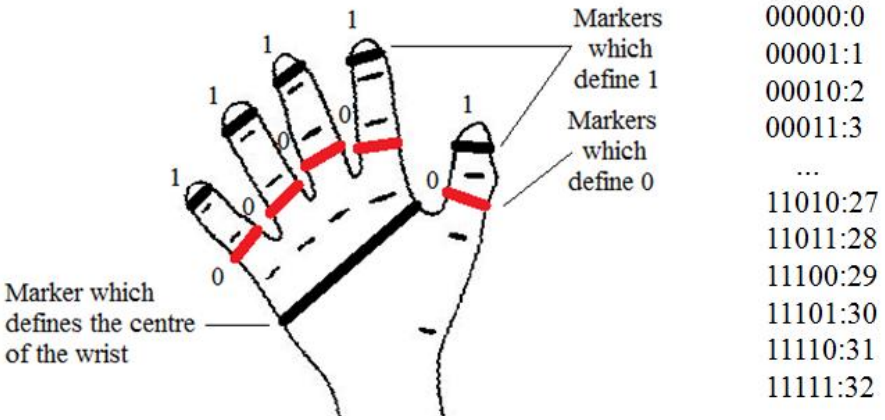

Figure 2. Wrist's markers and encoding bits

We define two types of markers to make the recognition and tracking procedures easier.

UML diagram

The program consists of several classes which work with each other and for good understanding we made UML diagram which represents relations between classes. It helps us to write programming code correctly. Figure 3 demonstrates UML Diagram.

The squares mean personal classes with some undefined variables and methods which will be define later. Some classes inherit variables and methods from other classes.

The class Light represents the components of the light such as brightness and contrast which are needed for camera calibration. As we can see, class Camera is extended by class Light and class Tracker. That means Camera includes some components of the light and camera is a tracker device.

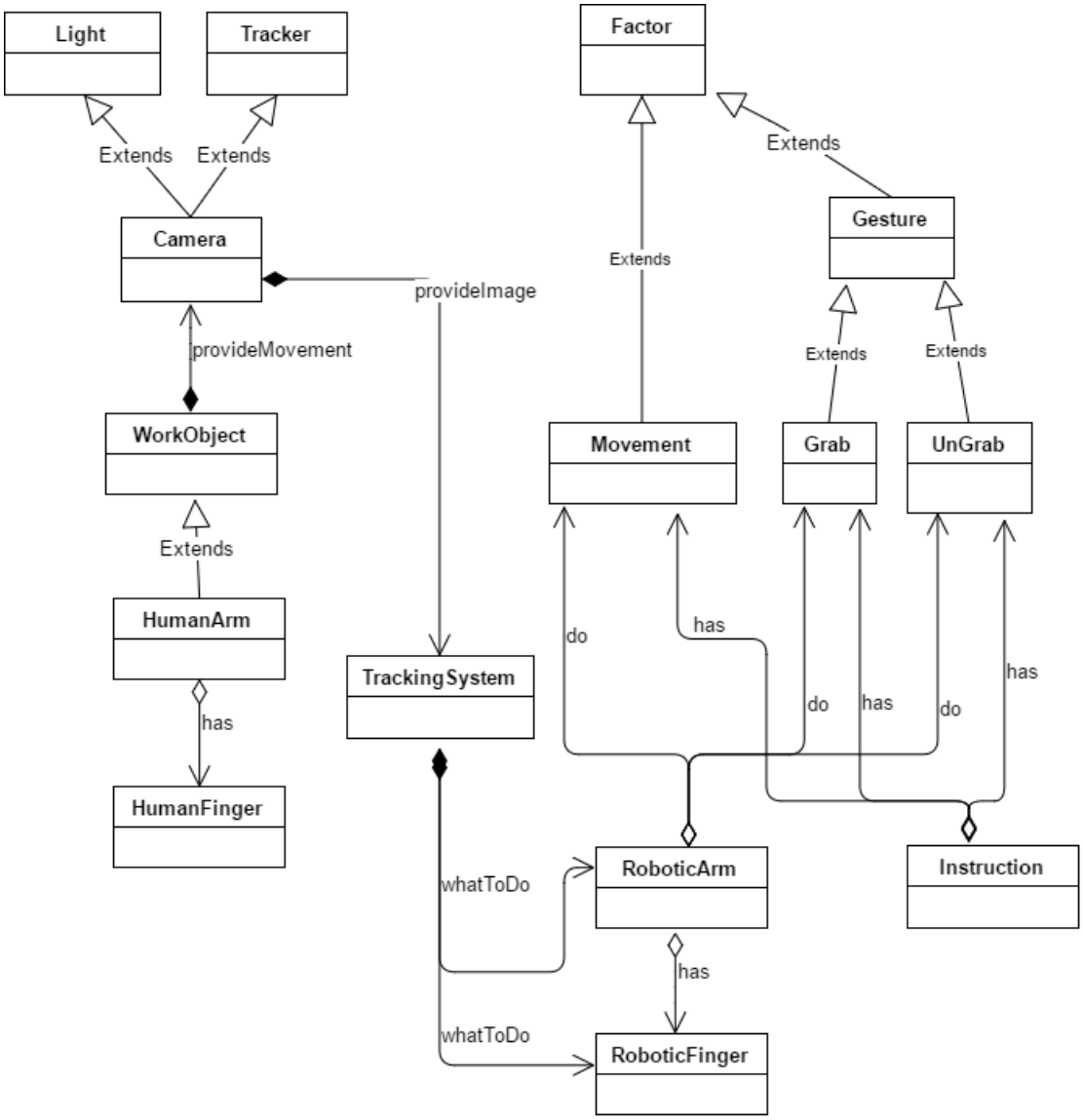

Figure 3. UML Diagram

Class WorkObject represents user's arm and it is extended of HumanArm class and HumanFinger class. That means WorkObject consists of variables from HumanArm class which consists of variables from HumanFinger class. So, we can describe user's arm by these three classes. Also we can see that WorkObject class provides movement to the camera. This means that information about movement go from environment through the camera.

Class HumanFinger could consists of no more than five variables which represent human's fingers. So, if we have a robotic arm which consists of five robo-fingers, we can control them by human's fingers.

Class HumanArm includes information about personal characteristics such as color and shape of arm. It let us to determine the object on the image. Also we can use these parameters for making a kind of a password which save us from none workers control.

Class Factor defines class Movement and class Gesture as main classes which can influence on the work process of the program and on the robotic arm. This class should be abstract.

Classes Movement and Gesture define kind of user's activity and also they have a representation in the class Instruction which is used for helping. So, user can ask the program for showing the instruction about how something works.

Classes RoboticArm and RoboticFinger define special characteristics of robotic arm.

Hardware

We are going to use material handling robot Mitsubishi as a robotic arm for this system. It is a compact, 6-axis robot is IP65 rated and feature 64-bit RISC/DSP multi-tasking controller [6]. Typical web cameras are going to be used as trackers. The connection structure is demonstrated at the figure 4:

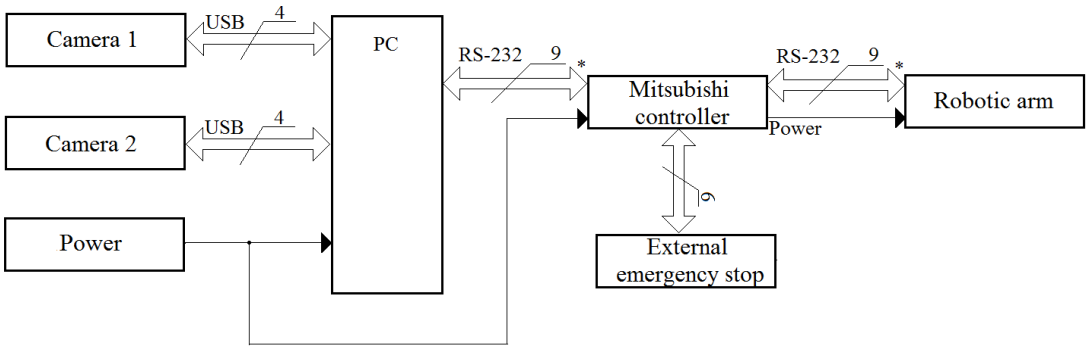

*used with special expansion serial interface card

Figure 4. Connection structure

The cameras use usb 2.0 type for connection to the personal computer. Then we use special RS232 Cable with 9-pins to connect PC and Mitsubishi controller. Mitsubishi controller and Robotic arm are connected by the power cable and by the signal cable the same as RS-232.

SUMMARY

Nowadays, the amount of bionic robotic systems is growing. This growth is connected with improving of robotic mechanisms and systems and also powerful of calculations. The robotic systems are interesting and perspective field for researching. The machine vision could be used for manipulating more competitive devices than robotic arm. Also it let us the possibility to control robotic manipulator closer and simpler than by special controller. This system can be improved and implemented on the different king of manufactories where human could be hurt.

REFERENCES

[1] Vincent, J. F. V.; Bogatyreva, O. A.; Bogatyrev, N. R.; Bowyer, A. & Pahl, A.-K. “Biomimetics – its practice and theory” Journal of the Royal Society Interface, 2006, pp. 471–482.

[2] Potekhin V.V., Erofeev S.A., Ipatov O.S., Markov S.A., Sulerova A.S., Shkodyrev V.P. Adaptive Intelligent Manufacturing Control Systems, Proceedings of 26th DAAAM International Symposium on Intelligent Manufacturing and Automation, (2015)

[3] Potekhin V.V., Chiem Xuan, Bykova V.I., Sulerova A.S. Process automation engineering within the concept of «Industry 4.0», Proceedings of the symposium automated systems and technologies, pp. 189-198, (2015)

[4] Cognex (2016). "Introduction to Machine Vision". Assembly Magazine. URL: http://www.assemblymag.com/ (date of access: 26.04.2017)

[5] Ramesh, V., Meer, P., “Real-time tracking of non-rigid objects using mean-shift.”, Computer Vision and Pattern Recognition Proceedings IEEE conference, pp. 142, 149, (2000)

[6] Material Handling Robots (2005). URL: http://news.thomasnet.com/ (date of access 30.04.2017)

[7] OpenCV (Open Source Computer Vision Library). URL: http://opencv.org/about.html (data of access 1.05.2017)